Leszek Ogonowski
PROFESJONALNE TRANSFORMATORY

TS180-5

For a transformer fits OT12.Transformator can be made on the annealed laminations thick 0.3 mm for an additional charge 19USD.

Caption

sizes	overall dimensions	$U_{n/In}$	output voltage for current
P_{max}	maximum power	U_{we}	input voltage
core	core type	price	price
f_{zas}	operating frequency	weight	approximate weight

Specyfikacje

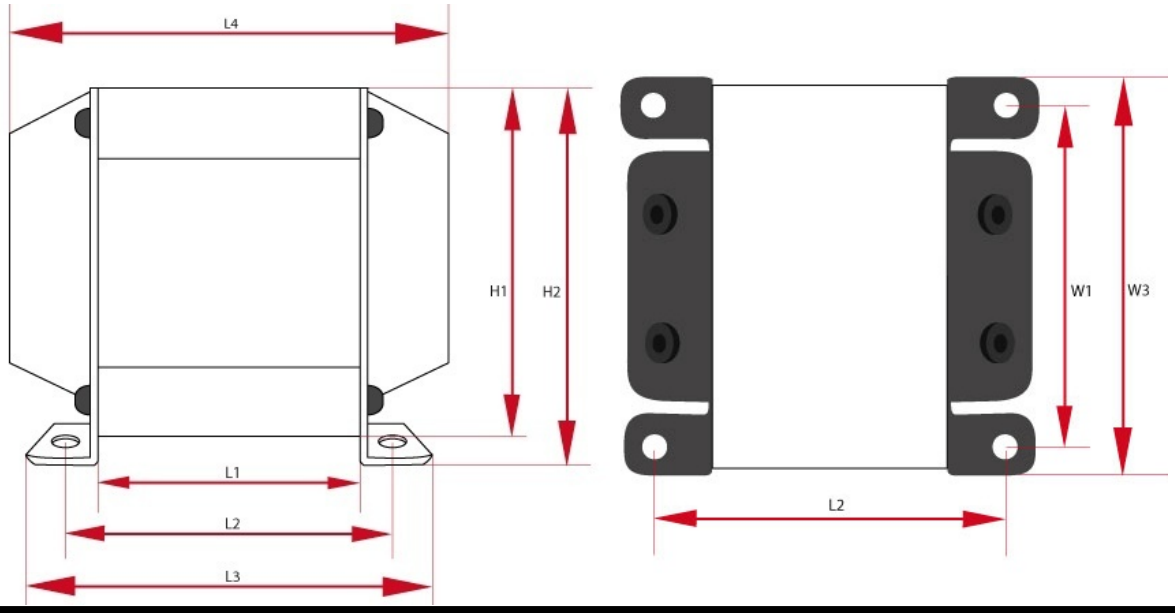

Power Transformer - TS180-5 - wersja z dwoma deklami (PL)							
P_{max}	U_{in}	F_z	Core	Size W	Size H	Size L	Weight
180 W	230 V	50 Hz	EI96/59	W1 - 110 mm W2 - 110 mm W3 - 110 mm	H1 - 110 mm H2 - 110 mm	L1 - 110 mm L2 - 110 mm L3 - 110 mm L4 - 110 mm	3.2 kg
U_{a1}	U_{a2}	U_{a3}	U_{a4}	U_{a5}	U_{a6}	U_{a7}	U_{a8}
300-0-300V/0,16A	6,3V/1A	3,15-0-3,15V/4A	-	-	-	-	-
Osłona	Count						
-	1						

Leszek Ogonowski
PROFESJONALNE TRANSFORMATORY

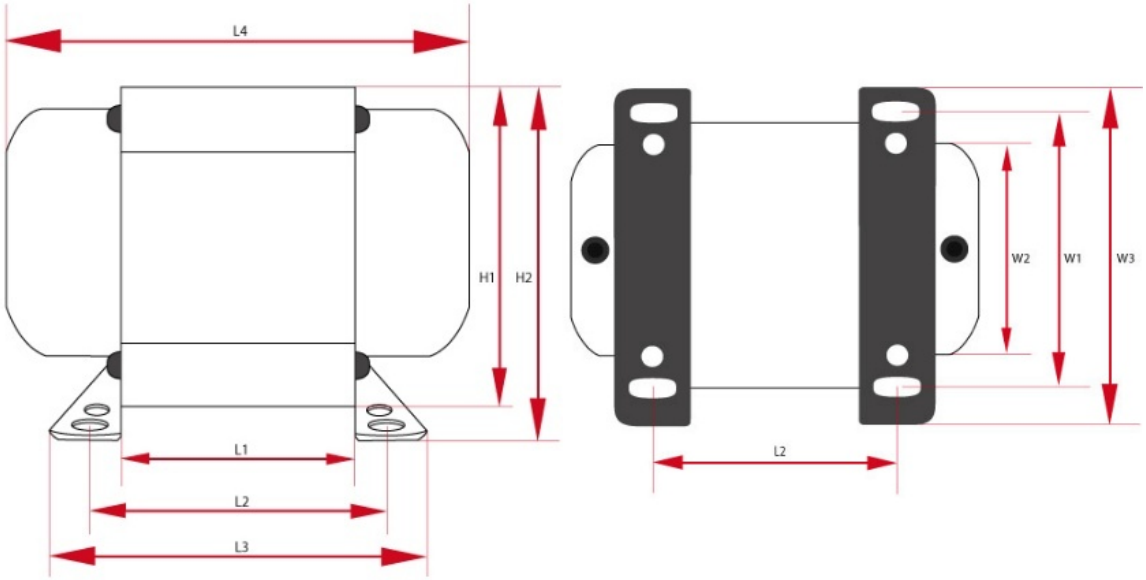

Power Transformer - TS180-5 - wersja z dwoma deklami (DE)							
P_{max}	U_{in}	F_z	Core	Size W	Size H	Size L	Weight
180 W	230 V	50 Hz	EI96/59	W1 - 110 mm W2 - 110 mm W3 - 110 mm	H1 - 110 mm H2 - 110 mm	L1 - 110 mm L2 - 110 mm L3 - 110 mm L4 - 110 mm	3.2 kg
U_{a1}	U_{a2}	U_{a3}	U_{a4}	U_{a5}	U_{a6}	U_{a7}	U_{a8}
300-0-300V/0,16A	6,3V/1A	3,15-0-3,15V/4A	-	-	-	-	-
Osłona	Count						
-	1						